2019 Updated Extended Phase 1 Habitat Survey of Land off Yarmouth Road, Melton, Suffolk

Cotswold Wildlife Surveys

April 2020

CONTENTS

Page

Cotswold Wildlife Surveys Ltd (CWS) has prepared this report in accordance with the instructions of Richard Brown Planning, on behalf of Christchurch Land and Estates (Melton) Limited ("the Client"), by email dated 24th March 2014 and under the terms of appointment for CWS. This report is confidential and non-assignable by the Client and CWS shall not be responsible for any use of the report or its contents for any purpose other than that for which it was prepared and provided. Should the Client require to pass copies of the report to other parties for information, the whole of the report should be so copied, but no professional liability or warranty shall be extended to other parties by CWS in this connection without the explicit written agreement thereto by CWS. The report may be assigned by the Client by way of absolute legal assignment to a purchaser of all or part of the site to which the report refers ("The Site") without the consent of CWS being required and such assignment shall be effective upon written notice thereof being given to CWS. No further assignment shall be permitted. In the event of the Client entering into a legal joint venture to develop The Site, the report can be regarded as having been issued by CWS jointly in favour of the Client and the joint venture partner, and in respect of the report CWS would owe the joint venture partner the same duty of care that we owed to the Client when we were instructed to prepare the report subject to all the matters contained or referred to in the report.

SUMMARY

In April 2014, Cotswold Wildlife Surveys carried out an Extended Phase 1 Habitat Survey of land off Yarmouth Road in Melton, Suffolk. This was undertaken to determine the presence of any important habitats or species which might be impacted on by potential development of the site.

Ecological data provided by Suffolk Biological Records Centre revealed the presence of no statutory and three non-statutory nature conservation sites within a 1.0 km radius of the land.

Due to the distance between the sites and the land, the presence of barriers such as roads, and the lack of any direct connectivity, the proposed development is unlikely to impact adversely on any of the citation species or habitats within the sites.

The data also revealed a small number of records of Protected, UK Biodiversity Action Plan (UKBAP) and Local Biodiversity Action Plan (LBAP) species from within a 1.0 km radius of the site.

No records came from the land itself, however there were a number of bat records in the search area, these including Serotine *Eptesicus serotinus*, Barbastelle *Barbastella barbastellus*, Brown Long-eared *Plecotus auritus* and Common Pipistrelle *Pipistrellus pipistrellus*. This suggests that the land or specific features upon the land might be used by foraging bats in the area.

Other mammal records included West European Hedgehog *Erinaceus europaeus* and Brown Hare *Lepus capensis*.

Other species identified included a wide range of birds such as Common Kingfisher A*lcedo atthis*, Great Bittern *Botaurus stellaris*, Curlew Sandpiper *Calidris ferruginea*, Eurasian Curlew *Numenius arquata*, Common Cuckoo *Cuculus canorus* and Common Nightingale *Luscinia megarhynchos,* amongst many others.

Invertebrate species were also well represented, and included Grayling *Hipparchia semele*, Wall *Lasiommata megera*, Small Heath *Coenonympha pamphilus*, Mottled Rustic *Caradrina Morpheus* and Stag Beetle *Lucanus cervus*.

There was only a single record of reptiles within the search area, this a Grass Snake *Natrix natrix*. There were no records of Great Crested Newts *Triturus cristatus* or other amphibians.

The initial Phase 1 survey took place on 23rd June 2014, in warm and bright conditions with no wind. A second visit was undertaken on 2nd October 2015, again in bright, warm and still conditions. On 7th February 2019 a further updated survey of the site was carried out in cool and cloudy conditions, with a light wind.

The site comprised a large triangular shaped field, which was under continuous cultivation for arable crops and intensively managed.

A small block of woodland stood in the southeastern corner of the field where the site bordered Yarmouth Road. This was lined with dense scrub and tall ruderal vegetation.

Narrow strips of scattered scrub and tall ruderal vegetation ran along the southern and western margins of the field, whilst a wider strip of poor semi-improved grassland bordered Yarmouth Road at the northeastern corner of the site.

Trimmed intact hedgerows and hedges with trees bordered the site.

No rare vascular plants were found, and all species recorded were common and widespread. There were no invasive or notifiable species.

A total of six species of bird were observed during the visits, all of which were species of Low Conservation Concern (RSPB Green list). It was considered likely that some birds could use the woodland, hedges and trees for nesting purposes during the breeding season.

Since all in-use bird's nests and their contents are protected from damage or destruction, any tree and shrub removal should be undertaken outside the period 1st March to 31st August inclusive. If this time frame cannot be avoided, a close inspection of the trees and hedges to be removed should be undertaken prior to clearance. Work should not be carried out within a minimum of 5.0 metres of any in-use nest, although this distance could be more depending on the species.

Three of the trees within the curtilage of the site supported features such as decay cavities, woodpecker holes, fissures and exfoliating bark, that would be considered suitable for bat roosting and/or hibernation.

The majority of the site provided relatively low value habitat to foraging or commuting bats, this due to much of the field being dominated by arable crops.

However, the small block of woodland and hedges with trees provided potential foraging and commuting habitats for bats, so these will be retained.

The woodland also contained an active Badger *Meles meles* sett, this consisting of four entrances in October 2015. During the updated survey in 2019 the sett was still active, and at least one further entrance hole was found. In addition, an outlier entrance hole was noted nearby, but still within the wooded area.

With an absence of any ponds or other still water wetland features on the land itself, the site had no potential for breeding amphibians.

However, there were five ponds within 500 m of the site, although none were accessible due to being on private land. Irrespective of this all five lay at least 400-450 m away, beyond local and main roads, the latter a significant barrier to newt dispersal.

Given the absence of records in the area, and the barriers to dispersal, it was considered unlikely that Great Crested Newts would be present, and no further surveys are required.

The majority of the site was also considered unlikely to support reptiles, as there were no obvious refugia or hibernacula, relatively poor foraging and limited basking areas.

Although no evidence of reptiles or amphibians was found, the potential for small mammals to be present on site exists, and thus care will be taken at all times during any vegetation removal and topsoil stripping. Any small mammals disturbed or uncovered will either be caught by hand and relocated to a safe area, or left to vacate the work site in their own time.

Since much of the site was dominated by arable land, it was concluded that there was low potential for invertebrate assemblages, in particular those species listed as a priority in the UK Biodiversity Action Plan and/or Local Biodiversity Action Plan. However, the field margins provided attractive habitat for common invertebrate species, and a number of butterflies including Meadow Brown *Maniola jurtina*, Peacock *Aglais io* and Small Tortoiseshell *Aglais urticae* were recorded during the surveys.

If excavations are to be undertaken, it should be noted that open trenches could potentially trap wildlife, especially if these fill up with water. If trenches cannot be infilled immediately then they will either be covered overnight or escape routes will be provided. These can be in the form of branches or boards placed on the bottom of the trench, with their upper ends above ground level and touching the sides, or sloping ends left in trenches.

A wide variety of biodiversity enhancements have been proposed and are detailed in Section 4.4.

1. INTRODUCTION

1.1 Background and survey objectives

In April 2014, Cotswold Wildlife Surveys carried out an Extended Phase 1 Habitat Survey of land off Yarmouth Road in Melton, Suffolk. This was undertaken to determine the presence of any important habitats or species which might be impacted on by potential development of the site. Updated surveys were subsequently undertaken in October 2015 and February 2019.

Ecological data supplied by the Suffolk Biological Record Centre revealed the presence of no statutory and three non-statutory nature conservation sites within a 1.0 km radius of the site, along with a number of records of Protected Species, Section 41 species and Biodiversity Action Plan priority species.

1.2 Site description

The site bordered Yarmouth Road to the east and St Audry's Road to the west. St Audry's Golf Course bordered the site to the north.

The Ordnance Survey Grid Reference is TM 28510 51321, centred on the middle of the site.

The land comprised a large triangular shaped field which was under continuous cultivation and intensively managed.

A small block of woodland stood on the site of a disused pit in the southeastern corner of the field where the site bordered Yarmouth Road. The woodland comprised a number of mature trees that included Pedunculate Oak *Quercus Robur*, Ash *Fraxinus excelsior*, Sycamore *Acer pseudoplatanus*, Sweet Chestnut *Castanea sativa*, Common Beech *Fagus sylvatica*, Hawthorn *Crataegus monogyna*, Wild Cherry *Prunus avium* and Elder *Sambucus nigra*.

This woodland edge was lined with dense Bramble *Rubus fruticosus* scrub and tall ruderal vegetation, which included Common Nettle *Urtica dioica*, Creeping Thistle *Cirsium arvense* and Common Cleavers *Galium aparine*.

Narrow strips of scattered Bramble scrub and tall ruderal vegetation consisting of Common Nettle, Creeping Thistle, Common Cleavers, Hogweed *Heracleum sphondylium* and Alexander's *Smyrnium olusatrum* ran along the southern and western margins of the field.

A wider strip (8-10 metres) of poor semi-improved grassland bordered Yarmouth Road along the northeastern side of the field.

The grassland was dominated by tall grass species which included meadow-grasses *Poa Spp*., False Oat-grass *Arrhenatherum elatius*, Common Couch *Elymus repens* and Perennial Ryegrass *Lolium perenne*. Amongst the sward were a small number of forbs including Cow Parsley *Anthriscus sylvestris*, White Clover *Trifolium repens*, Red Clover *T. pratense*, Sainfoin *Onobrychis viciifolia*, Red Campion *Silene dioica*, Common Mallow *Malva sylvestris*, Evening Primrose *Oenothera biennis* and Curled Dock *Rumex crispus*.

The hedgerows with trees which bordered the site perimeter comprised predominantly of Hawthorn and Blackthorn *Prunus spinosa* with some Elder and Bramble. The trees within the hedges were generally mature and included Ash, Pedunculate Oak, Sycamore, Sweet Chestnut and Common Beech.

1.3 Proposed works

A residential development and care home is proposed for the site, as shown in the Indicative Masterplan below (Plan 1).

Plan 1 Indicative Masterplan

2. METHODOLOGY

2.1 Desk study

A detailed desk study was undertaken to determine the nature conservation designations and protected species that had been recorded within a 1.0 km radius of the site. This involved contacting statutory and non-statutory organisations, and then assimilating and reviewing the data provided.

The consultees for the desk study were:

- Multi Agency Geographic Information (MAGIC) website www.magic.gov.uk;
- National Biodiversity Network Gateway website;
- Suffolk Biological Records Centre.

2.2 Habitat survey

A Phase 1 Habitat Survey was carried out across the whole of the survey site. It was conducted using standard JNCC (2003) techniques and methodologies.

The initial Phase 1 visit took place on 23rd June 2014, in warm, bright conditions with no wind.

A second visit was undertaken on 2nd October 2015, again in bright, warm and still conditions.

A further updated survey was carried out on 7th February 2019, in cool and cloudy conditions, with a light wind.

2.3 Protected species survey

During the surveys the potential for other protected and important species was assessed. This included European Protected Species, legally protected species and Local Biodiversity Action Plan Species (and habitats).

2.3.1 Badgers

Badgers are generally nocturnal and evidence of their presence in an area often comes from field signs rather than sightings of the animals. Useful field signs include:

- Setts (main, outlying, annex or subsidiary)
- Tufts of hair caught on barbed wire fences;

- Conspicuous Badger paths;
- Footprints;
- Latrines – small excavated pits in which droppings are deposited;
- 'Snuffle holes' – small scrapes where Badgers have searched for insects and plant tubers;
- Day nests – bundles of grass and other vegetation where Badgers may sleep above ground;
- Scratch marks on trees (usually near the sett).

Daytime surveys looking for field signs can be carried out at any time of the year, and should be non-intrusive, but nocturnal surveys of setts (if required), are only likely to be effective from April to November, when Badgers are most active, and any cubs present will have emerged.

Main setts

These usually have a large number of holes with large spoil heaps, and the sett generally looks well used. They usually have well used paths to and from the sett and between sett entrances. Although normally the breeding sett is in continual use, it is possible to find a main sett that has become disused because of excessive digging or for some other reason, in which case it is recorded as a disused main sett.

Annex setts

These are always close to a main sett, usually less than 150 m away, and are usually connected to the main sett by one or more obvious, well worn paths. They consist of several holes, but are not necessarily in use all the time, even if the main sett is very active.

Subsidiary setts

These often these have only a few holes, are usually at least 50 m from a main sett, and do not have an obvious path connecting them with another sett. They are not continuously active.

Outlying setts

These usually only have one or two holes, often have little spoil outside the hole, have no obvious path connecting them with another sett, and are only used sporadically. When not in use by badgers, they are often taken over by foxes or even rabbits. However, they can still be recognised as badger setts by the shape of the tunnel (not the entrance hole), which is at least 250 mm in diameter and rounded or flattened oval in shape.

A search for evidence of Badger presence on site was undertaken as part of the Extended Phase 1 Habitat Survey.

2.3.2 Bats

In order to fully assess bat occupation of a particular site, the Bat Conservation Trust (2016) recommends that information gathered from a desk study of known bat records, and a daytime site walkover, is used to inform the type and extent of future bat survey work, potentially including nocturnal surveys.

The diurnal walkover provides an opportunity to check for signs of occupancy, such as droppings, scratch marks, feeding remains, carcasses, or even animals in residence, whilst nocturnal surveys (if required) allow numbers and species of bats to be confirmed. The latter are also used to determine the presence or absence of bats, where signs of bat activity are indeterminate or absent but suitability of roosting is considered to be medium to high.

Roosting places vary depending on the species. Pipistrelles usually inhabit narrow cracks or cavities around the outside of buildings, but they will roost in similar niches inside larger barns. Typical sites include soffit spaces, gaps behind fascia boards and end rafters, crevices around the ends of projecting purlins, under warped or lifted roof and ridge tiles, or in gaps in stone and brickwork where mortar has dropped out.

Larger species such as Brown Long-eared Bats *Plecotus auritus*, Myotis bats (Natterer's *Myotis nattereri* and Whiskered/Brandt's *M. mystacinus/M. brandtii*), and Lesser Horseshoes *Rhinolophus hipposideros*, like to roost in the roof voids of buildings, and can often be found hanging singly or in small groups from ridge boards or roof timbers, especially where these butt up against gable walls or chimney breasts. They especially favour older structures with timber frames. Here they squeeze into tight crevices making them difficult to observe.

Diurnal walkovers can be carried out at any time of the year, but nocturnal surveys should only be undertaken when bats are out of hibernation and in their summer roosts. The recommended period is from May to September inclusive, with May to August optimum and September sub-optimum. The season can be extended into October, although particularly cold weather will render this inadvisable. Indeed, the air temperature at the start of each survey must be at least 10°C or above.

Visits will be a minimum of two weeks apart, and the number of surveys is dependent on the evidence found or the suitability of the site to bats.

Where bats are found, or there is evidence of bat occupation or activity, i.e. that bat use is confirmed, the number and timing of visits will be decided by the ecologist, and will be appropriate for the type of roost. In general at least two nocturnal surveys will be carried out, both of which can be emergence surveys, or one emergence and one dawn re-entry.

Where there is no evidence of bat presence, and no suitability for roosting, no nocturnal surveys will be needed.

For a site with no evidence but low suitability, just one nocturnal emergence survey is required, this to be in the optimum period.

For medium suitability a minimum of two visits are needed, of which one must be in the optimum period, and one must be a dawn re-entry survey. With high suitability, three visits will be necessary, of which two must be in the optimum period. At least one of these must be a dawn re-entry survey, with the third visit either an emergence or a dawn re-entry.

For sites < 5 ha in size, and/or regularly shaped structures, at least two surveyors must be present, with more surveyors at larger sites and more complex buildings, e.g. those with multiple elevations and/or roof structures.

On the land off Yarmouth Road the trees were inspected for any gaps in the bark, patches of exfoliating bark, fissures, splits, cracks and cavities, including woodpecker holes that might provide potential roosting and/or hibernation places.

On 21st June 2014 and 2nd October 2015 this was carried out by Andy Warren (Natural England bat licence No. 2015-16489-CLS-CLS). On 7th February 2019 this was updated by Mollie Paxford (working under Natural England bat licence No. 2015-16489-CLS-CLS).

10x42 binoculars and a Fenix TK75 torch were used for the inaccessible/unreachable areas.

2.3.3 Birds

Most resident and migrant birds breed in the spring and summer, although Woodpigeons *Columba palumbus* and Collared Doves *Streptopelia decaocto* nest throughout the year, and as a result could be on eggs in almost any month.

In season, signs of breeding include singing males, display and copulation, birds gathering nesting materials, adults carrying food, calling chicks, etc.

In winter none of these activities may be occurring, so a survey for old nests and/or nest holes is the most reliable method of determining the presence or absence of breeding birds.

This was carried out during the Phase 1 Habitat Survey, along with a general site walkover to identify the presence of foraging birds.

2.3.4 Great Crested Newts

A survey for Great Crested Newts (GCN) may be indicated when background information on distribution suggests that they may be present. More detailed indicators are:

- *Any historical records of Great Crested Newts on the site or in the general area;*
- *A pond on or near the site (within around 500 m), even if it holds water only seasonally;*
- *Sites with refuges (such as piles of logs or rubble), grassland, scrub, woodland or hedgerows within 500 m of a pond*.

There are several field survey methods which can be employed depending on the time of year:

- *Bottle or funnel trapping – adults ideally February to May, with June and July sub-optimal, and August to September for detection of larvae (i.e. young);*
- *Egg search – April to June ideally, with March and July sub-optimal;*
- *Torch survey – March to May for adults, with February and June to July sub-optimal, and August to September for larvae;*
- *Netting – March to May for adults, with February and June to July sub-optimal, and August to September for larvae;*
- *Pitfall trapping – March to May and September for adults, with February, June to August and October sub-optimal;*
- *Refuge search – April to September ideally, with March and October sub-optimal.*

The latter two methods involve terrestrial habitats, the others aquatic habitats, for which a minimum of 4 visits per year are recommended, with at least 2 visits between mid-April and mid-May to record peak numbers (English Nature, 2001).

There were five ponds within 500 m of the site, none of which were accessible due to being on private land (Plan 2 overleaf).

However, all five lay at least 400-450 m away beyond local and main roads, the latter a significant barrier to newt dispersal.

Plan 2 Ponds within 500 m of the land off Yarmouth Road

Centre of 500 m radii ★

2.3.5 Otters

Otters are nocturnal and are active all year round. They are large with an adult male reaching up to 1.2 m from nose to tail, and weighing about 10 kg.

Feeding mainly on fish and amphibians, Otters live by undisturbed waters where there is plenty of cover, mostly by freshwater lakes, rivers and quiet small streams as well as some coasts.

An Otter may use over 40 km of river and needs many resting places throughout this range. A female otter will give birth to 1 to 3 cubs in a natal holt, which is often away from the main river and must be completely undisturbed.

Field signs include:

- Prints in soft mud;
- Spraints (faeces);
- Holts.

A search for evidence of Otter presence on site was undertaken as part of the Extended Phase 1 Habitat Survey.

2.3.6 Reptiles

Commoner reptiles which may be encountered in rural areas include Grass Snake, Slow-worm *Anguis fragilis*, and Common Lizard *Zootoca vivipara*.

During the winter months, from mid-October to late February or early March, they are in hibernation, usually deep in underground hibernacula, such as holes and cracks in the ground, among rocks or the roots of large trees, down animal burrows, or in piles of rubble or stone.

In the spring and summer they live above ground in well-vegetated places, with Grass Snakes often near or in water. Being cold-blooded all reptiles like to bask, and can often be found in open places.

There are very few signs of reptile presence, but these include:

- Shedded skin (snakes);
- Eggs (but not Common Lizard which gives birth to live young).

All potential refugia on site were checked where possible as part of the Extended Phase 1 Habitat Survey.

2.3.7 Water Voles

The Water Vole *Arvicola amphibius* is the largest of the British voles. It lives in a series of holes or burrows at the water's edge and can be found along the banks of ditches, streams, rivers, lakes and canals.

Although Water Voles live in colonies, the breeding females are territorial, each defining their contiguous territory with latrines during the breeding season. This lasts from March to October.

The Water Vole is herbivorous, feeding primarily on the lush aerial stems and leaves of waterside plants. Its activity is normally confined to the area within two metres of the watercourse, the bankside vegetation in this area not only essential for food, but also for cover from predators.

Water Vole activity can be assessed by looking for the following signs:

- Burrows;
- Faeces and latrines;
- Feeding stations;
- Runs;
- Paw prints in areas of soft mud;
- Feeding 'lawns';
- Predator field signs.

A search for evidence of Water Vole presence on site was undertaken as part of the Extended Phase 1 Habitat Survey.

2.4 Constraints

There were no constraints, as the initial survey was carried out at the optimal time of the year.

3. RESULTS

3.1 Desk study

3.1.1 Designated sites

Statutory Sites

There were no statutory sites within the search area.

Non-Statutory Sites

There were three non-statutory sites within the search area; Hospital Grove CWS (County Wildlife Site) located approximately 500 metres north of the site, Melton Picnic site CWS located 900 metres south of the site and Foxburrow Farm Suffolk Wildlife Trust Nature Reserve which is located within 100 metres of the site to the west.

Due to the distance between the sites and the land, the presence of barriers such as roads, and the lack of any direct connectivity, the proposed development is unlikely to impact adversely on any of the citation species or habitats in this site.

3.1.2 Protected species

The data also revealed a small number of records of Protected, UK Biodiversity Action Plan (UKBAP) and Local Biodiversity Action Plan (LBAP) species from within a 1.0 km radius of the site.

No records came from the land itself, however there a number of bat species records in the search area, including Serotine, Barbastelle, Brown Long-eared and Common Pipistrelle. This suggests that the land or specific features upon the land might be used by foraging bats in the area.

Other mammal records included West European Hedgehog and Brown Hare.

Additional species identified included a wide range of birds such as Common Kingfisher, Great Bittern, Curlew Sandpiper, Eurasian Curlew, Common Cuckoo and Common Nightingale amongst many others. Invertebrate species were also well represented and included Grayling, Wall, Small Heath, Mottled Rustic and Stag Beetle.

There was only one record of reptiles within the search area, this a Grass Snake.

3.1.3 Invasive species

A small number of invasive species records were present in the search area including Himalayan Balsam *Impatiens glandulifera* and Giant Hogweed *Heracleum mantegazzianum*, although no records came from or adjacent to the site itself.

3.2 Habitat survey

3.2.1 Habitat descriptions

The following habitats were recorded across the site:

- Woodland;
- Dense and scattered scrub;
- Poor semi-improved grassland;
- Tall ruderal vegetation;
- Hedge with trees;
- Arable.

These habitats are described below and are shown on the Phase 1 Habitat Survey map in Appendix 1, with the target notes (where applicable) in Appendix 2.

Woodland

A small block of woodland stood on the site of a disused pit in the southeastern corner of the field, where the site bordered Yarmouth Road (Figs. 1 and 2). The woodland consisted of a number of mature trees that included Pedunculate Oak, Ash, Sycamore, Sweet Chestnut, Common Beech, Hawthorn, Wild Cherry and Elder.

Figs. 1 & 2 Block of woodland

Scattered scrub

Pockets of dense and scattered Bramble scrub were present around the woodland edge and along parts of the field margins (Figs. 3 and 4).


Figs. 3 & 4 Scattered scrub

Poor semi-improved grassland

A strip of poor semi-improved grassland bordered Yarmouth Road at the northeastern corner of the field (Figs. 5 and 6). The grassland was dominated by tall grass species that included meadow-grasses, False Oat-grass, Common Couch and Perennial Ryegrass.


Figs. 5 & 6 Poor semi-improved grassland

Amongst the sward were a small number of forbs that included Cow Parsley, White Clover, Red Clover, Sainfoin, Red Campion, Common Mallow, Evening Primrose and Curled Dock.

Tall ruderal vegetation

Stands of tall ruderal vegetation including Common Nettle, Creeping Thistle and Common Cleavers lined the woodland edge whilst stands comprising Common Nettle, Creeping Thistle, Common Cleavers, Hogweed and Alexander's were present along the field margins (Figs. 7 and 8).


Figs. 7 & 8 Tall ruderal vegetation

Hedge and trees

The hedgerows with trees which bordered the site perimeter comprised predominantly of Hawthorn and Blackthorn with some Elder and Bramble. The trees within the hedges were generally mature and included Ash, Pedunculate Oak, Sycamore, Sweet Chestnut and Common Beech (Figs. 9 and 10).


Figs. 9 & 10 Hawthorn hedges with trees

Arable

The site was dominated by intensively managed arable farmland under continuous cultivation (Figs. 11 and 12).


Figs. 11 & 12 Arable

3.2.2 2019 updated survey

There had been very little change on the site since the previous surveys, with the land still in agricultural use and planted at the time of the updated survey on 7th February 2019 (Figs. 13 and 14).

Figs. 13 & 14 Arable farmland in 2019

The poor, semi-improved grassland was still present, whilst the hedgerows were also in the same condition as previously reported (Figs. 15 and 16).

Figs. 15 & 16 Grassland and hedgerow in 2019

The woodland cover was less dense due to the time of year but was also unchanged (Figs. 17 and 18).

Figs. 17 & 18 Woodland in 2019

3.2.3 Flora

The botanical composition of each habitat was typical, and all species recorded were common and widespread.

No rare vascular plants were found, and there were no invasive or notifiable species.

A list of species observed is presented in Appendix 3.

3.3 Protected species survey

3.3.1 Badgers

In October 2015, within the woodland in the disused pit area, there was a small active Badger sett consisting of four entrances (Figs. 19 and 20 – Target Note 1).

Figs. 19 & 20 Active Badger sett in woodland area

Paths led from the sett into the woodland, and southwest towards neighbouring gardens.

No latrines were found on the site, or any signs of foraging behaviour, this not surprising given the continuous cultivation of the main area of land.

During the updated survey in February 2019 the sett was still active (Fig. 21), and at least one further entrance hole was found. In addition, an outlier entrance hole was found nearby, but still within the wooded area (Fig. 22 – Target Note 6).

Fig. 21 Badger sett

Fig. 22 Outlier hole

The Badgers had been foraging within the wooded pit area (Fig. 23), but then crossing the arable farmland to access the wider countryside (Fig. 24).

Fig. 23 Badger foraging **Fig. 24 Badger trails**

3.3.2 Bats

Three of the trees within the curtilage of the site supported features such as decay cavities, woodpecker holes, fissures and exfoliating bark, that would be considered suitable for bat roosting and/or hibernation (Figs. 25 and 26 – Target Notes 2, 3 and 4).

Figs. 25 & 26 Holes in trees

The majority of the site provided relatively low value habitat to foraging or commuting bats, this due to much of the field being dominated by arable crops. However, the small block of woodland and hedges with trees provided foraging and commuting habitats for bats.

3.3.3 Birds

A total of six species of bird were observed during the visits, all of which were species of Low Conservation Concern (RSPB Green list). It was considered likely that some birds could use the woodland, hedges and trees nesting purposes during the breeding season.

A full list of species noted is given in Appendix 4.

3.3.4 Great Crested Newts

The presence of Great Crested Newts was considered unlikely. Any suitable refugia were checked, but no evidence of Great Crested Newts or any other newt species was found.

3.3.5 Otters

A survey for Otter was undertaken as part of the Extended Phase 1 Habitat Survey, but this identified no evidence of Otter activity.

3.3.6 Reptiles

Any suitable refugia on site were checked during the Extended Phase 1 Habitat Survey, but no reptiles, or evidence of reptiles, was found.

3.3.7 Water Voles

A survey for Water was undertaken as part of the Extended Phase 1 Habitat Survey. This identified no evidence of Water Vole.

3.3.8 Invertebrates

Since much of the site was dominated arable land, it was concluded that there was low potential for invertebrate assemblages, in particular those species listed as a priority in the UK Biodiversity Action Plan and/or Local Biodiversity Action Plan. However, the field margins provided attractive habitat for common invertebrate species, and a number of butterflies including Meadow Brown, Peacock and Small Tortoiseshell were observed during the survey.

3.3.9 Other species

Rabbits *Oryctolagus cuniculus* were present in fairly large numbers, and a family of Foxes *Vulpes vulpes* was disturbed in the woodland during the initial survey. Indeed, well-worn mammal paths led to an earth within the woodland (Figs. 27 and 28 – Target Note 5).

Figs. 27 & 28 Mammal path and Fox earth in woodland

4. CONCLUSIONS AND RECOMMENDATIONS

4.1 Site evaluation

The majority of the site was concluded to be generally of low wildlife value, this due to much of the land being dominated by arable crops with very little floral diversity.

The strip of poor semi-improved grassland offered a relatively limited floristic diversity with a small number of common and widespread species, and it was rather limited in extent.

The woodland and the hedges with trees provided cover for nesting and feeding habitat for birds, whilst also offering foraging and commuting habitat for bats. However, the majority of the site provided relatively low value habitat to foraging or commuting bats, this due to much of the field being dominated by arable crops.

A small active Badger sett was present in the woodland area on the site of the former pit, and a Fox earth was also noted nearby.

The marginal strips and woodland edge habitat which comprised a mosaic of tall ruderal vegetation and scrub provided attractive habitat for common invertebrates and also offered cover for small mammals.

Due to the distance between the sites and the land, the presence of barriers such as roads, and the lack of any direct connectivity, the proposed development is unlikely to impact adversely on any of the citation species or habitats within the sites.

4.2 Possible impacts of proposed work and recommendations

The main impact of any development will be on the semi-natural habitat noted above, in particular the woodland and the hedges with trees.

It was considered likely that some birds could use woodland and hedges and trees for nesting purposes during the breeding season. Since all in-use bird's nests and their contents are protected from damage or destruction, any tree and shrub removal should be undertaken outside the period 1st March to 31st August inclusive.

If this time frame cannot be avoided, a close inspection of the trees and shrubs to be removed should be undertaken prior to clearance. Work should not be carried out within a minimum of 5.0 metres of any in-use nest, although this distance could be more depending on the species.

However, the trees and hedgerows are to be retained, so there will continue to be opportunities for bird nesting on the site.

Three of the trees within the curtilage of the site supported features such as decay cavities, woodpecker holes, fissures and exfoliating bark, that would be considered suitable for bat roosting and/or hibernation. These are to be retained and there will be no impact upon them. As such, no further surveys or inspections will be required.

Furthermore, in order to comply with paragraph 125 of the National Planning Policy Framework, the development should aim to limit the impact of light pollution on bats by maintaining dark routes for commuting and foraging where possible. As such any lighting installed will follow the guidance provided by the Bat Conservation Trust and the Institute of Lighting Engineers.

Any trees not to be removed as part of the proposed works will be given adequate protection during the works, in accordance with British Standard *BS5837:2012 Trees in relation to Design, Demolition and Construction – Recommendations*. Protection will be installed on site prior to the commencement of any works on site.

The protection measures will include Protective Barrier Fencing (PBF). The PBF is to remain in situ for the entire duration of the construction phase, unless otherwise agreed in writing by the Local Authority. The type of fence to be used is shown in Fig. 29 below.

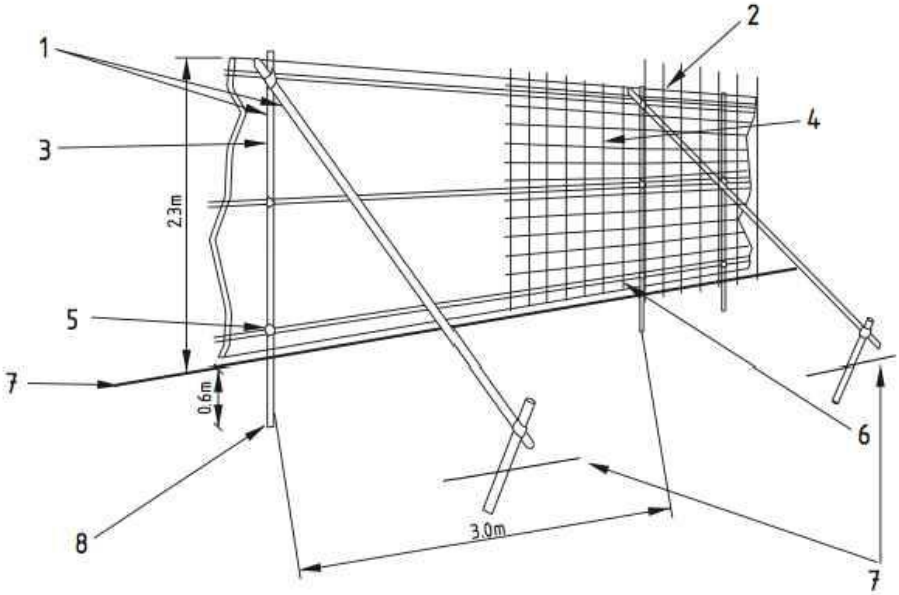

Fig. 29 Protective Barrier Fencing

The PBF, due to the degree and proximity of work taking place around the trees, is to consist of *"a vertical and horizontal* (scaffold) *framework, well braced to resist impacts, with the vertical tubes spaced at a maximum of 3m. Onto this, weld mesh panels should be securely fixed with wire or scaffold clamps. Weldmesh panels on rubber or concrete feet are not resistant to impact and should not be used.*

Tree protection signage denoting the words *"TREE PROTECTION ZONE – KEEP OUT"* is to be fixed onto every other panel of the PBF (Fig. 30).

Fig. 30 Example of signage

With an absence of any ponds or other still water wetland features on the site itself, there was no potential for breeding amphibians.

There were five ponds within 500 m of the site, none of which were accessible due to being on private land. However, all five lay at least 400-450 m away beyond local and main roads, the latter a significant barrier to newt dispersal.

Given the absence of records in the area, and the barriers to dispersal, it was considered unlikely that Great Crested Newts would be present, and no further surveys are considered necessary.

The majority of the site was also considered unlikely to support reptiles, as there were no obvious refugia or hibernacula, relatively poor foraging and limited basking areas.

Although no evidence of reptiles or amphibians was found, the potential for small mammals to be present on site exists, and thus care will be taken at all times during vegetation removal and topsoil stripping. Any small mammals disturbed or uncovered will either be caught by hand and relocated to a safe area, or left to vacate the work site in their own time.

The Badger sett and Fox earth lie within the woodland area which will be protected as part of the proposed development. Although there will be some partial infilling of the disused pit, this will not impact on the sett or earth, and the works will be undertaken sensitively to ensure that the animals are not disturbed or their tunnels obstructed or collapsed.

Furthermore, if excavations are to be undertaken, it is noted that open trenches could potentially trap wildlife, especially if these fill up with water. If trenches cannot be infilled immediately then they will either be covered overnight or escape routes will be provided. These will be in the form of branches or boards placed on the bottom of the trench, with their upper ends above ground level and touching the sides, or sloping ends left in trenches.

All contractors on site will also be briefed about the nearby presence of Badgers before works commence.

4.3 Further surveys

If any tree or hedge removal cannot be timed appropriately to avoid the bird nesting period (considered to be March to August inclusive), then further surveys of the trees and/or hedge to be removed will be necessary.

4.4 Biodiversity enhancements

In addition to the retention of the boundary trees and hedgerows, it is intended to fence off and protect the woodland area on the site of the disused pit. This will maintain the opportunities for breeding birds and any foraging bats, and will minimise disturbance to the Fox earth and Badger sett.

A variety of boxes will also be erected on trees in the woodland and retained trees around the site boundaries.

For bats this will include ten Schwegler 2F boxes (Fig. 31). Schwegler woodcrete boxes have the highest rates of occupation of all box types. The 75% wood sawdust, concrete and clay mixture allows natural respiration, stable temperature, and durability.

They are extremely long lasting and rot- and predator-proof, and will hang from a tree branch near the trunk, or can be fixed to a trunk.

The 2F is the most popular general purpose box, particularly attractive to the smaller British bats. It has a simple design with a narrow entrance slit on the front.

Fig. 31 Schwegler 2F bat box

All the boxes will be at least 4.0-5.0 m above ground level and clear of any overhanging branches or wires. They will face anywhere from SE to SW to provide differing aspects to suit different weather conditions.

For birds it is proposed to erect five each of two types of Schwegler tit nest boxes: 1B (26 mm) and 1B (32 mm), four Schwegler 2H open-fronted boxes, and two Schwegler 1SP House Sparrow terraces, the latter installed under the eaves of the care home. These are shown in Figs. 32 and 33 below.

Figs. 32 & 33 Schwegler bird nest boxes 1B (26 mm), 2H and 1B (32 mm) & 1SP

Woodcrete Nest Boxes come with a 25 year guarantee against rot, weather and natural damage.

The 1B is available with a 26 mm hole for the tit *Parus spp* family and a 32 mm hole suitable for sparrows *Passer spp*.

The 2H is open-fronted for a variety of species such as Robin *Erithacus rubecula*, Wren *Troglodytes troglodytes*, Spotted Flycatcher *Muscicapa striolatum* and Pied Wagtail *Motacilla alba*.

The Sparrow Terrace (1SP) has been designed to help redress the balance of falling House Sparrow *Passer domesticus* numbers. It provides ideal nesting opportunities for three families, and may also occasionally attract tits and Spotted Flycatchers.

The terrace can be fixed on to the surface of a suitable wall or incorporated into the wall. It is suitable for all types of houses in built-up areas, and on industrial and agricultural buildings such as barns, sheds and factories. Due to its weight (15kg), it is not suitable for fences or garden sheds.

The terraces will be placed at least two metres or more above the ground and installed on the surface of the wall using the plugs and screws provided, or installed directly into the wall. Cleaning is advisable but not necessary. The front panel can be removed by turning the screw hook. The Sparrow Terrace is available in either Stone or Brown.

In addition, the care home will incorporate a Schwegler 1 FR bat tube for pipistrelles, this on a gable end facing the woodland boundary to the north of the site.

The Schwegler 1FR bat tube (Fig. 34) is a long box that can be installed within brick masonry, beneath plasterwork or wood panelling, or incorporated into concrete structures such as factory buildings or bridges. Inside it contains a woodcrete surface, a roughened wood board, and a metal mesh, providing a choice of roosting areas depending on the weather conditions and the bats' habits. This box is maintenance-free as the entrance slit is at the bottom.

The dimensions are 47.5 cm high x 20 cm wide x 12.5 cm deep, with an entrance 15 cm wide x 2 cm deep. The weight is 13 kg. No painting is required, but if necessary a natural breathable paint can be used.

An example of a fitted bat tube is shown in Fig. 25.

Fig. 34 Schweger 1 FR bat tube Fig. 35 Bat tube installed in gable end

The surface water attenuation ponds/swale will not be permanent ponds, but will contain water following rainfall. These ephemeral wetland features will be functional but will attract wildlife such as birds, dragonflies, foraging bats, and a wide variety of invertebrates.

Native species planting around the edge and the bottom of the ponds/swale will include emergents such as Common Reed *Phragmites australis*, Bog Bean *Menyanthes trifoliata*, Arrowhead *Sagittaria sagittifolia*, Common Water Crowfoot *Ranunculus aquatilis*, and Water Speedwell *Veronica anagallis-aquatica*.

The grassland around the attenuation ponds and across the public areas of the site will be enriched with native wildflowers typical of neutral soils.

Additionally, any new tree planting will use native broadleaved species, these selected and positioned to take account of the spatial constraints of the site.

Although no further surveys are considered necessary, to protect amphibians which may venture onto the site, a briefing to contractors will be made prior to works commencing. This will include advice on the dismantling and lifting by hand of any potential refugia, care taken during vegetation removal and excavations of the topsoil, and storage of building materials on pallets and/or bare ground.

If any amphibians (or small mammals) are encountered they will be carefully captured and released nearby, or allowed to move out of the area on their own accord.

Log piles will be provided in the woodland area, along with a large subterranean refuge/hibernaculum. The latter will take account of the tree root systems, and where possible no digging will take place, as the disused pit is lower lying than surrounding land areas. Equally no soil will be heaped around the base of the tree trunks, as that may cause the root collars to decay.

Finally, the design of the scheme has allowed any potential bat flight corridors around the boundaries to be retained, but also represents a significant improvement in terms of habitat connectivity and green infrastructure. Indeed, the central part of the site will be a corridor of grassland and trees, this linking the woodland to the north with the main attenuation pond and the woodland block on the site of the disused pit. This will provide bats, birds and invertebrates such as butterflies and bees with new foraging opportunities, and will allow small mammals such as Hedgehogs to pass safely through the site.

5. REFERENCES

Collins, J. (ed.), 2016. *Bat Surveys for Professional Ecologists: Good Practice Guidelines. (3rd edn).* Bat Conservation Trust, London.

English Nature, 2004. *Bat mitigation guidelines*. English Nature, Peterborough.

Fitter R., Fitter A. & Blamey, M., 1983. *The Wildflowers of Britain and Northern Europe*. Collins, London.

Fitter R. & Fitter A., 1984. *Grasses, Sedges, Rushes & Ferns of Britain and Northern Europe*. Collins, London.

Gent, T. & Gibson, S., 1998. *Herpetofauna Worker's Manual*. Joint Nature Conservation Committee, Peterborough.

JNCC, 2003. *Handbook for Phase 1 habitat survey – a technique for environmental audit (revised reprint).* Joint Nature Conservation Committee, Peterborough.

Langton, T., Beckett, C. And Foster, J., 2001. *Great Crested Newt: Conservation Handbook.* Froglife, Suffolk.

Mitchell-Jones A. J. & McLeish, 2004. *Bat Workers' Manual*. Joint Nature Conservation Committee, Peterborough.

Natural England, 2007. *Badgers and Development*. Natural England, Peterborough.

Oldham R.S. et al., 2000. *Evaluating the suitability of habitat for the Great Crested Newt (Triturus cristatus).* Herpetological Journal 10 (4), 143-155.

Scottish Natural Heritage, 2007. *Badgers and Development*. Scottish Natural Heritage, Edinburgh.

Stebbings R.E., 1986. *Which bat is it?* The Mammal Society and The Vincent Wildlife Trust, London.

Stoke, W. J., 1958. *British Wild Animals.* Frederick Warne & Co. Ltd., London.

The Vincent Wildlife Trust, 2003. *The Bats of Britain and Ireland*. The Vincent Wildlife Trust, Ledbury.

APPENDICES

Appendix 1: Phase 1 Habitat Survey Map

Appendix 2: Target Notes

Appendix 3: Plant species list

Appendix 4: Bird species list

Appendix 5: Relevant legislation

Appendix 1: Phase 1 Habitat Survey Map

Not to scale

Legend

	Survey boundary	SI	Poor semi-improved grassland		Intact hedge with trees
	Scattered scrub		Dense scrub	A	Arable
	Tall ruderal vegetation		Broadleaved woodland		Target Note

Appendix 2: Target Notes

Target Number	Notes
1	Active Badger sett
2	Hole in tree with potential for bats.
3	Hole in tree with potential for bats.
4	Hole in tree with potential for bats.
5	Fox earth in woodland
6	Badger outlier hole

Appendix 3: Plant species list

Latin name	Common name
Quercus robur	Pedunculate Oak
Fraxinus excelsior	Ash
Fagus sylvatica	Common Beech
Castanea sativa	Sweet Chestnut
Acer pseudoplatanus	Sycamore
Prunus avium	Wild Cherry
Crataegus monogyna	Hawthorn
Prunus spinosa	Blackthorn
Rubus fruticosus	Bramble
Heracleum sphondylium	Hogweed
Smyrnium olusatrum	Alexander's
Galium aparine	Common Cleavers
Urtica dioica	Common Nettle
Cirsium arvense	Creeping Thistle
Sambucus nigra	Elder
Onobrychis viciifolia	Sainfoin
Trifolium pratensis	Red Clover
Trifolium repens	White Clover
Anthriscus sylvestris	Cow Parsley
Silene dioica	Red Campion
Oenothera biennis	Evening Primrose
Malva sylvestris	Common Mallow
Rumex crispus	Curled Dock
Lolium perenne	Perennial Ryegrass
Elymus repens	Common Couch
Arrhenatherum elatius	False Oat-grass
Poa annua	Annual Meadow-grass
Poa pratensis	Smooth Meadow-grass

Appendix 4: Bird species list

Common name	Latin name
Woodpigeon	*Columba palumbus*
Blackbird	*Turdus merula*
Great Tit	*Parus major*
Magpie	*Pica pica*
Carrion Crow	*Corvus corone corone*
Chaffinch	*Fringella coelebs*

Appendix 5: Relevant legislation

5.1 – Badgers

Badgers are protected in Britain by the Protection of Badgers Act 1992. The purpose of this Act is to protect the animals from deliberate cruelty and from the incidental effects of lawful activities which could cause them harm. Under this legislation it is an offence to:

- Wilfully kill, injure, take, possess or cruelly ill-treat a Badger, or attempt to do so;
- Interfere with a sett by damaging or destroying it;
- Obstruct access to, or any entrance of, a Badger sett;
- Disturb a Badger when it is occupying a sett.

Note that if any of the above resulted from a person being *reckless*, even if they had no intention of committing the offence, their action would still be considered an offence. A person is not guilty of an offence if it can be shown that the act was *'the incidental result of a lawful operation and could not have been reasonably avoided'*; only a court can decide what is 'reasonable' in any set of circumstances.

Penalties for offences under this legislation can be up to six months in prison and a fine of up to £5,000 for each offence.

A Badger sett is defined in the Act as *'any structure or place which displays signs indicating current use by a Badger*'. This can include culverts, pipes and holes under sheds, piles of boulders, old mines and quarries, etc.

'Current use' does not simply mean 'current occupation' and for licensing purposes it is defined as *'any sett within an occupied Badger territory regardless of when it may have last been used'*. A sett therefore, in an occupied territory, is classified as in current use even if it is only used seasonally or occasionally by Badgers, and is afforded the same protection in law.

5.2 – Bats

In England, Scotland and Wales, all bat species are fully protected under the Wildlife and Countryside Act 1981 (WCA) (as amended), through inclusion in Schedule 5. In England and Wales this Act has been amended by the Countryside and Rights of Way Act 2000 (CRoW), which adds an extra offence, makes species offences arrestable, increases the time limits for some prosecutions, and increases penalties.

All bats are also included in Schedule 2 of the Conservation (Natural Habitats, & c.) Regulations 1994, (or Northern Ireland 1995) (the Habitats Regulations), which defines 'European protected species of animals'.

The above legislation can be summarised thus (Mitchell-Jones and McLeish, 2004):

- *Intentionally or deliberately kill, injure or capture (or take) bats;*
- *Deliberately disturb bats (whether in a roost or not;*
- *Recklessly disturb roosting bats or obstruct access to their roosts;*
- *Damage or destroy roosts;*
- *Possess or transport a bat or any part of a part of a bat, unless acquired legally;*
- *Sell (or offer for sale) or exchange bats, or parts of bats.*

The word 'roost' is not used in the legislation, but is used here for simplicity. The actual wording is 'any structure or place which any wild animal…uses for shelter or protection' (WCA), or 'breeding site or resting place' (Habitats Regulations). As bats generally have both a winter and a summer roost, the legislation is clear that all roosts are protected whether bats are in residence at the time or not.

5.3 – Birds

In Britain, all wild birds, their nests and eggs are protected under the Wildlife & Countryside Act 1981. There are penalties for:

- *Killing, injuring or capturing them, or attempting any of these;*
- *Taking or damaging the nest whilst in use;*
- *Taking or destroying the eggs.*

Cotswold Wildlife Surveys Limited
Company Reg. No. 6864285 (England & Wales)

Andy Warren BSc (Hons), MA (LM), Tech Cert (Arbor A), MCIEEM, TechArborA
Withy Way, Charingworth, Chipping Campden, Gloucestershire, GL55 6NU

Tel: 01386 593056/07879 848449

andy@cotswoldwildlifesurveys.co.uk

Land off Yarmouth Road, Melton, Suffolk – 2019 Updated Extended Phase 1 Habitat Survey

To: Christchurch Land and Estates (Melton) Limited

Report Number: 1644-CWS-02

Version: 03

Date: 7th April 2020